RADIUS INSIDE PROJECTED EDGES OF NOZZLES 1/8" MINIMUM

#17 .25 X 60 X 129 (4 TO 1)

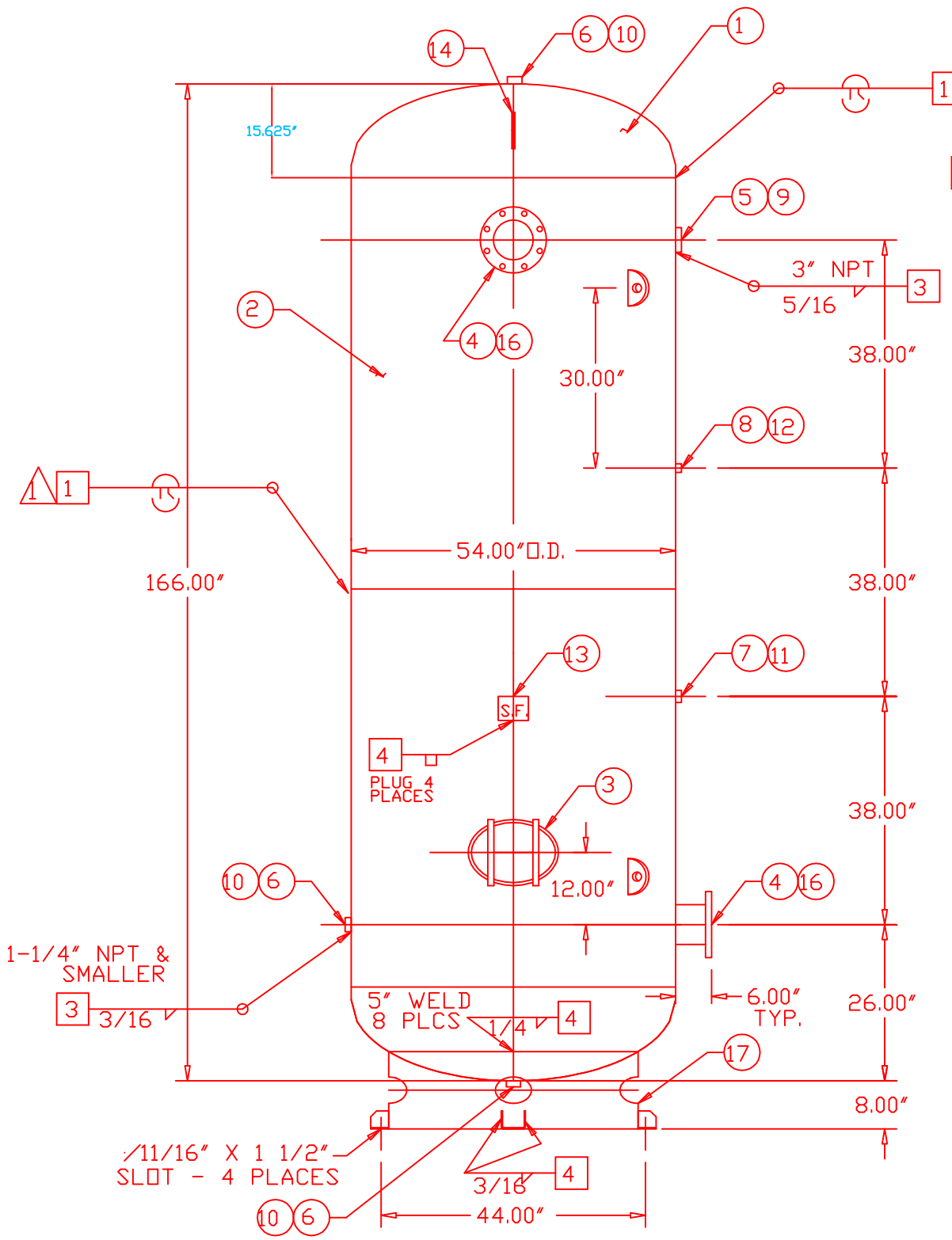

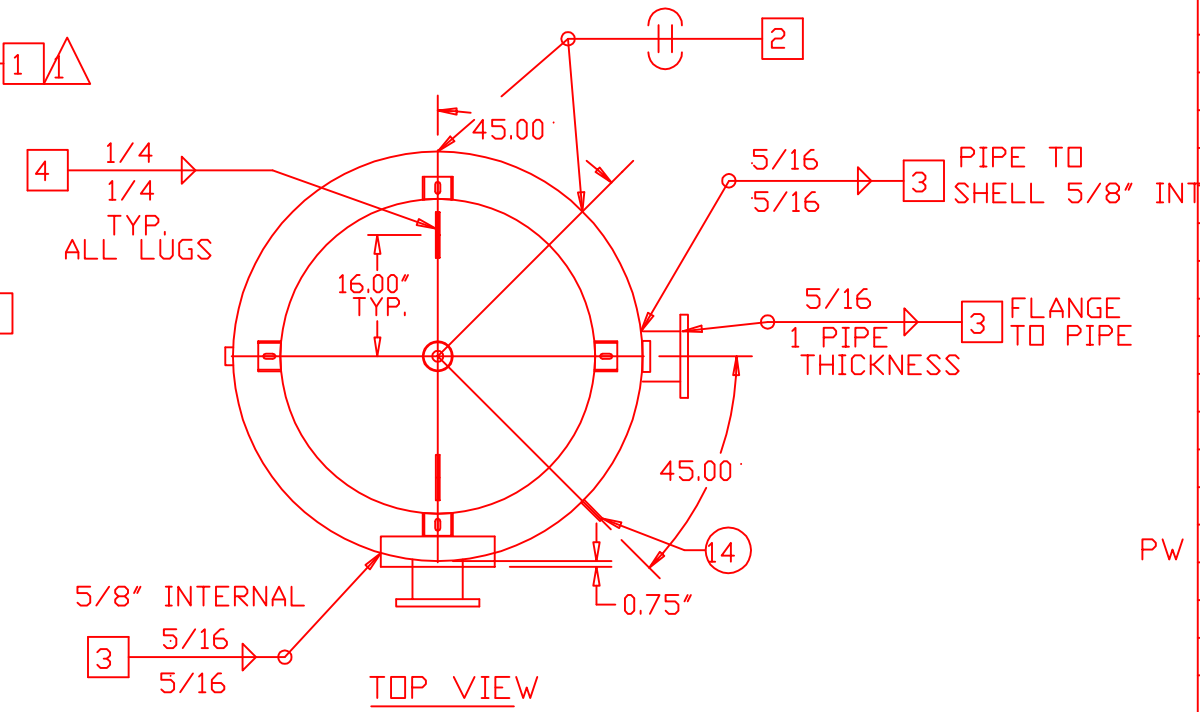

2 COURSES

PRIMER EXTERIOR

ITEM	P/N	DESCRIPTION	QTY
1	H54313J	54" OD 2:1 SE JOG HEAD	2
2	C100898-SL	SHELL .313 x 67.59 X 168.663	2
3	S100343	12 X 16 MANWAY-3/4"TH	1
4	S102154	6" 150# RFSO ASY 7" LG S40	2
5	F103001	3" NPT 710 SERIES RAD	1
6	F101250	1-1/4" SERIES 386 NPT	3
7	F101000	1" SERIES 385 NPT	1
8	F100250	1/4" SERIES 381 NPT	1
9	F503000	3" PLASTIC PLUG	1
10	F501250	1-1/4" PLASTIC PLUG	3
11	F501000	1" PLASTIC PLUG	1
12	F500250	1/4" PLASTIC PLUG	1
13	S100001	NAME PLATE	1
14	LL0063	LIFTING LUG 5/8" THK	4
16	F506001	6" PLASTIC COVER	2
PW 17	S102141	SKIRT ASSEMBLY	1

DESIGN & CALCULATIONS COMPLY WITH ASME CODE SECTION VIII, DIV1. 20..... EDITION ..... ADDENDA

1 SFI-1 SK 1

2 SFI-5 SK 7

3 SFI-2-1

4 SEE ATTACHMENT

1 AFTER OFFSET MAGNETIC PARTICLE

2 SPOT X-RAY PER UW52

3 FULL X-RAY PER UW51

S SEAL WELDING REQUIRED

ATTACHMENT WPS

3/16 & BELOW	A569 SFI-6
5/16 & ABOVE	A36 SFI-2-1
STRUCTURAL	A36 SFI-2-1
1/4	A635 SFI-3

SFI STOCK V54-1550-165-2

ENG APP'L/DATE SAB 11/13/09

QCM APP'L/DATE

AI REVIEW

54" X 166" VERTICAL - AIR RECEIVER (1,550 GALLONS)

NO.	DATE	REVISION	ENG	QCM	AI REVIEW
9	11/13/09	ADD SKIRT ASY & TOP NPT	SAB	JP	BQ 11/18/09

HEAD THK: .260 MIN. C.A.: NONE MAT'L SA516-70 EFF 85%

SHELL THK: .313 MIN. C.A.: NONE MAT'L SA455 EFF 70%

NAT'L BD. YES

STAMP: "U" STAMP

CRN: L6744.24561

REF:

MAWP 165 PSI AT 400 °F

MDMT -20 °F AT 165 PSI

TEST: HYDRO AT 215 PSI

PNEU. AT --- PSI

PIPE = SA106-B SCH 40
FLANGE = SA105 150# ANSI B16.5
FITTINGS = SA181 CL 70
MANWAY = SA106-C
IMPACT TESTING NOT REQUIRED PER UG-20(f)

STEEL FAB

OAKVILLE, ONT. ABINGDON, VA

DRAWN BY: SBB

DATE 5/22/95

P/N C100898

REV 9